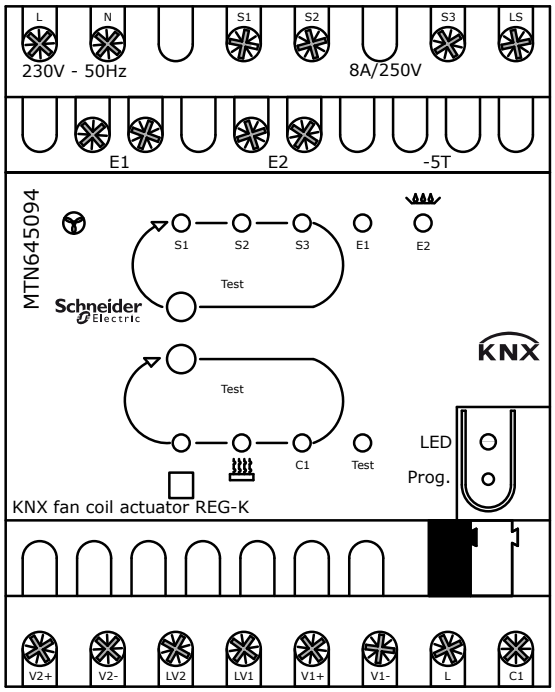
L
N
S1
S2
S3
LS
230V - 50Hz
8A/250V
E1
E2
-5T
MTN645094
S1
S2
S3
E1
E2
Test
Schneider Electric
KNX
Test
C1
Test
LED
Prog.
KNX fan coil actuator REG-K
V2+
V2-
LV2
LV1
V1+
V1-
L
C1